E4-WM5-Y617A00
MOUNTING INSTRUCTION

IMPORTANT! READ THIS FIRST!

Installation of shock absorbers or other suspension components requires special tools and expert knowledge. Accordingly, installation of all BILSTEIN products must be performed by a professional automotive suspension technician.

When replacing other brands, BILSTEIN shock absorbers or other suspension components should always be installed as a set. All BILSTEIN products must only be used for the specific, intended application as indicated in the application guide. **Any use of any BILSTEIN product other than for its intended use may result in serious bodily injury or death.**

Always use a chassis hoist for the installation of BILSTEIN products and make certain that the raised vehicle is securely attached to the hoist and/or supported to prevent the vehicle from slipping, falling, or moving during the installation process.

If you install any BILSTEIN product without the necessary special tools, expertise, and chassis hoist, you may subject yourself to the risk of serious bodily injury or death.

BILSTEIN shock absorbers are gas-filled and are highly pressurized.

- Never place any BILSTEIN shock absorbers in a vise or use a clamp on any BILSTEIN shock absorber.
- Never apply heat near any BILSTEIN shock absorber.
- Never attempt to open or repair any BILSTEIN product, in order to prevent **serious bodily injury or death.**

Any attempt to misuse, misapply, modify, or tamper with any BILSTEIN suspension product voids any warranty and **may result in serious bodily injury or death.**

While installing any BILSTEIN product:

- Do not use impact tools for loosening or tightening fasteners, because this may destroy the screw threads.
- Self-locking fasteners must only be used **once**!
- Reuse original equipment components only if they are in good condition, otherwise replace them with new components.
- Never remove the slight film of oil on the shock absorber piston rod and seal.
- All mounting fasteners for shock absorbers and other suspension components must be securely tightened before tension is placed on the suspension system, unless otherwise specified in the manufacturer's service manual or in this instruction.

After installing any BILSTEIN product:

- The suspension caster and camber must be checked and/or adjusted to comply with the vehicle manufacturer's specifications.
- The (load dependent) brake compensator and the anti-lock brake system must be checked and/or reset to comply with the vehicle manufacturer's specifications.
- The headlight aim must be checked and adjusted. Or, if applicable, adaptive headlights must be checked and recalibrated to comply with the vehicle manufacturer's specifications.
- If applicable, any/all Advanced Driver Assistance Systems (ADAS) must be checked and recalibrated to comply with the vehicle manufacturer's specifications.

CAUTION for COILOVER TYPE SUSPENSIONS!!!
If disassembling a coilover type suspension, refer to the vehicle manufacturer's service manual for proper procedures. The coil spring is preloaded and must be compressed with a spring compressor to release load before the upper mount is disassembled. Failure to follow the vehicle manufacturer's procedures may cause serious injury or death, and may damage the vehicle.

IMPORTANT!!!
This BILSTEIN product may or may not be compatible with non-BILSTEIN aftermarket products and/or vehicle modifications. It is the responsibility of the professional automotive suspension technician performing the installation to identify any non-OEM components and/or modifications on the vehicle that may interact with the suspension system. These must be evaluated for any potential physical static or dynamic interference with and/or effect on the function of this BILSTEIN product.

A. Remove the shock and spring unit from the vehicle following all procedures in the vehicle manufacturer's service manual. Note the position of the studs in the upper mount relative to the lower mount bearing (important for reassembly).

B. Using an appropriate spring compressor, compress the coil spring until it can be rotated freely by hand. Then disassemble the shock and spring unit.

C. Refer to Figure 1 to identify which original parts must be re-used.

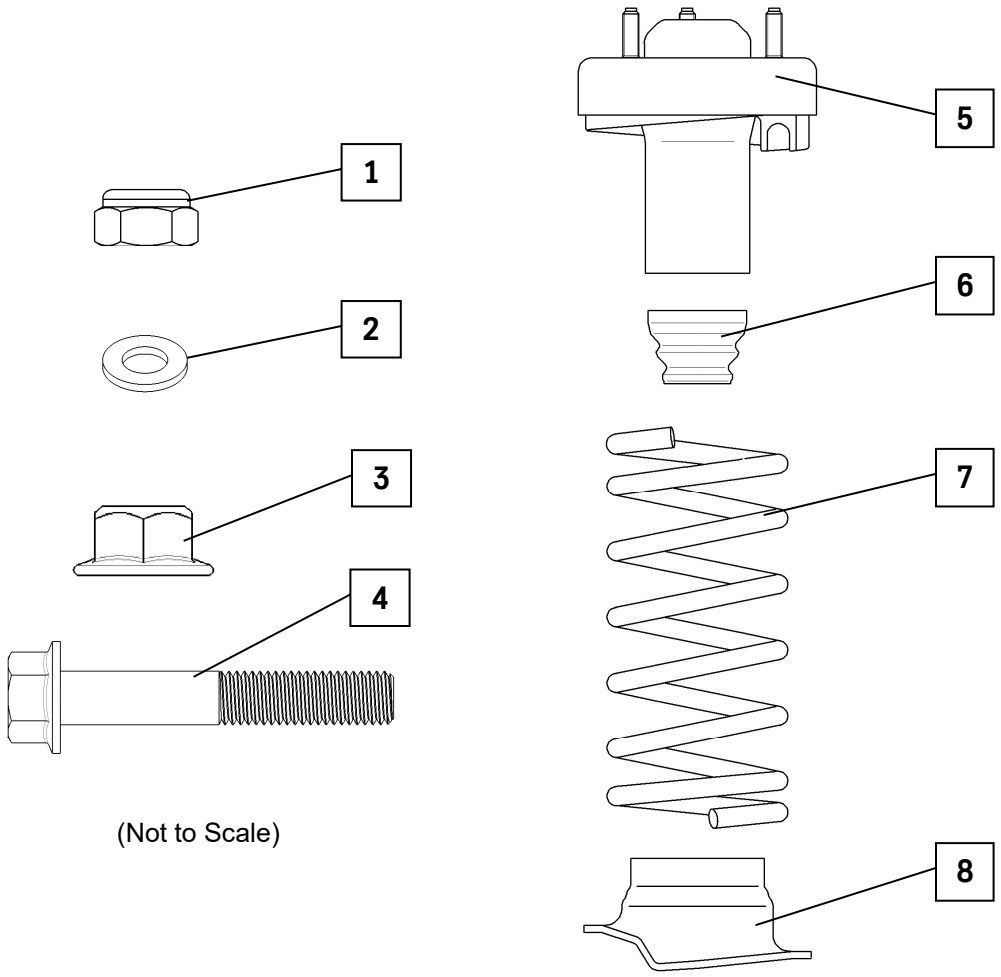

(Not to Scale)

Parts supplied by Bilstein:

1. **M12x1.5 Locknut (x1)**
2. **M12 Washer (x1)**
3. **M12x1.75 Flange nut (x2)**
4. **M12x1.75 Bolt (x2)**

Original parts to be reused:

5. **Upper mount (with isolator and dust cover)**
6. **Bump stop**
7. **Coil spring**
8. **Spring seat**

Figure 1

D. Install the circlip in the desired ride height location**. Refer to Figure 2. Use appropriate tools to move the circlip. Ensure that the circlip is fully seated in the groove after moving it. You should be able to rotate it manually in the groove.

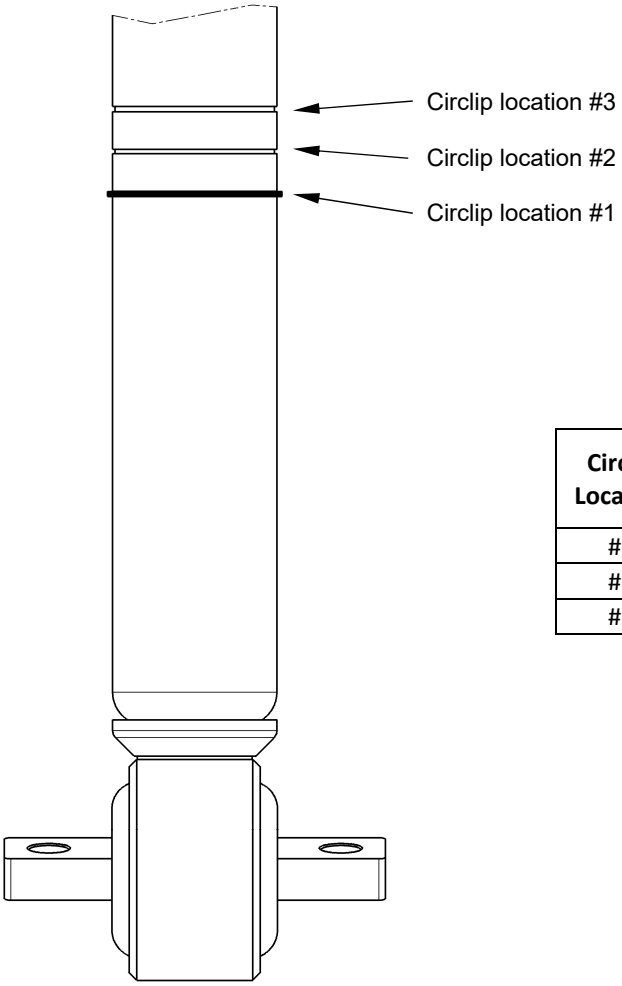

Circlip Location	Ford Expedition 2014-2017 Lift Heights**	Ford Expedition 2018+ Lift Heights**
#3	1" (25mm)	1.6" (40mm)
#2	Stock Ride Height	0.8" (20mm)
#1	Not Recommended	Stock Ride Height

**** Ride heights indicated are typical. Actual ride height is influenced by which factory suspension the vehicle is equipped with and its condition; optional equipment and accessories on your vehicle, and other vehicle modifications such as replacement coil springs, wheel and tire combinations, etc. Modifying/lifting the suspension to your vehicle may raise its center of gravity and may make it more susceptible to loss of control and/or rollover, which may result in death or serious injury. We strongly recommend that you offset the loss of rollover resistance as much as possible by increasing tire track width, and that you equip the vehicle with a functional roll bar and cage system. Wear seat belts and shoulder harnesses at all times, and avoid situations where a side rollover may occur.**

Figure 2

E. Install the spring seat (8) on to the shock body (with the smaller end up) such that the groove inside the spring seat fits over the circlip on the shock body. Install the spring seat in the direction shown only. The circlip must fit completely in the groove inside spring seat (see detail). Refer to Figure 3. Improper installation will cause permanent damage to the shock!

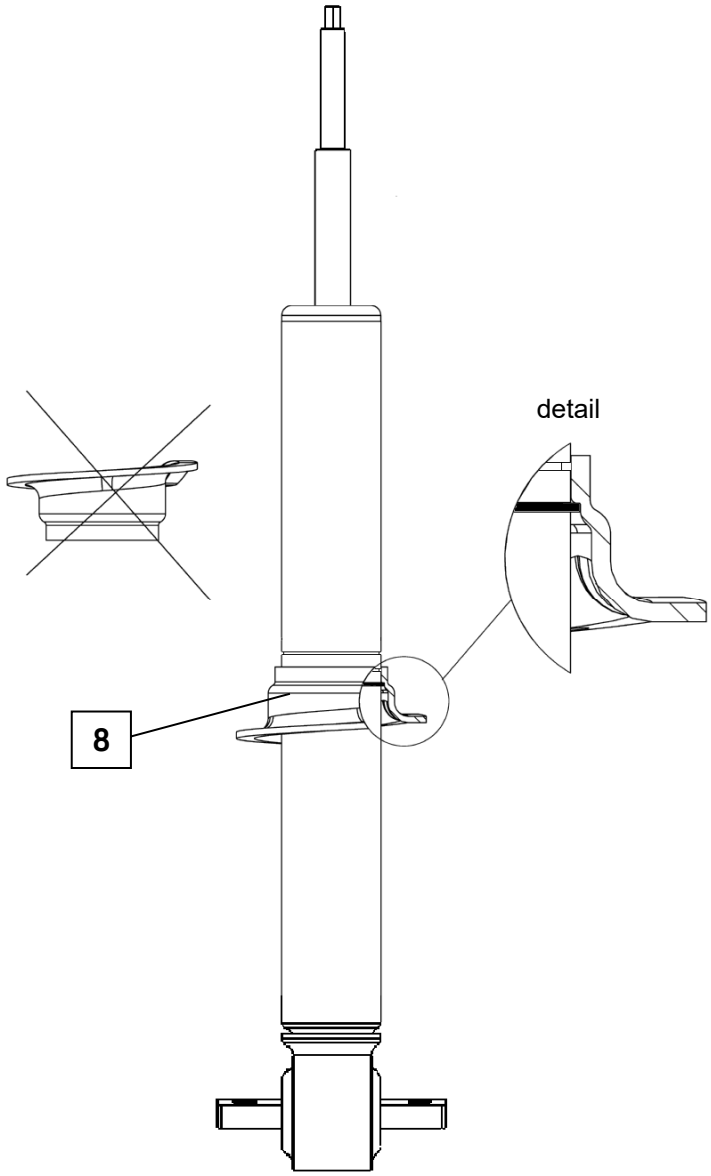

Figure 3

Refer to Figure 4 for steps F through J.

F. Fit the bump stop (6) over the piston rod, leaving it flush with the top of the chrome length.

G. Using an appropriate spring compressor, compress the coil spring (7) and install it on the shock absorber. Align the lower coil end with end of the ramp on the spring seat (8).

H. Install the upper mount (5) over the piston rod end and on to the top of the coil spring. Rotate upper mount so that its studs are in their original position relative to the lower mount bearing (as noted in step A). Align the upper coil end of the coil spring with the rubber isolator in the upper mount.

I. Install the M12 Washer (2) and the M12x1.5 locknut (1) and tighten to 45 N·m (34 lb·ft). Use an 8mm wrench to keep the piston rod from rotating while torqueing the locknut.

****** DO NOT USE AN IMPACT WRENCH TO TIGHTEN THE LOCKNUT! ******

J. Release the spring compressor while ensuring that the ends of the coil spring remain aligned with the spring seat (8) and upper mount (5).

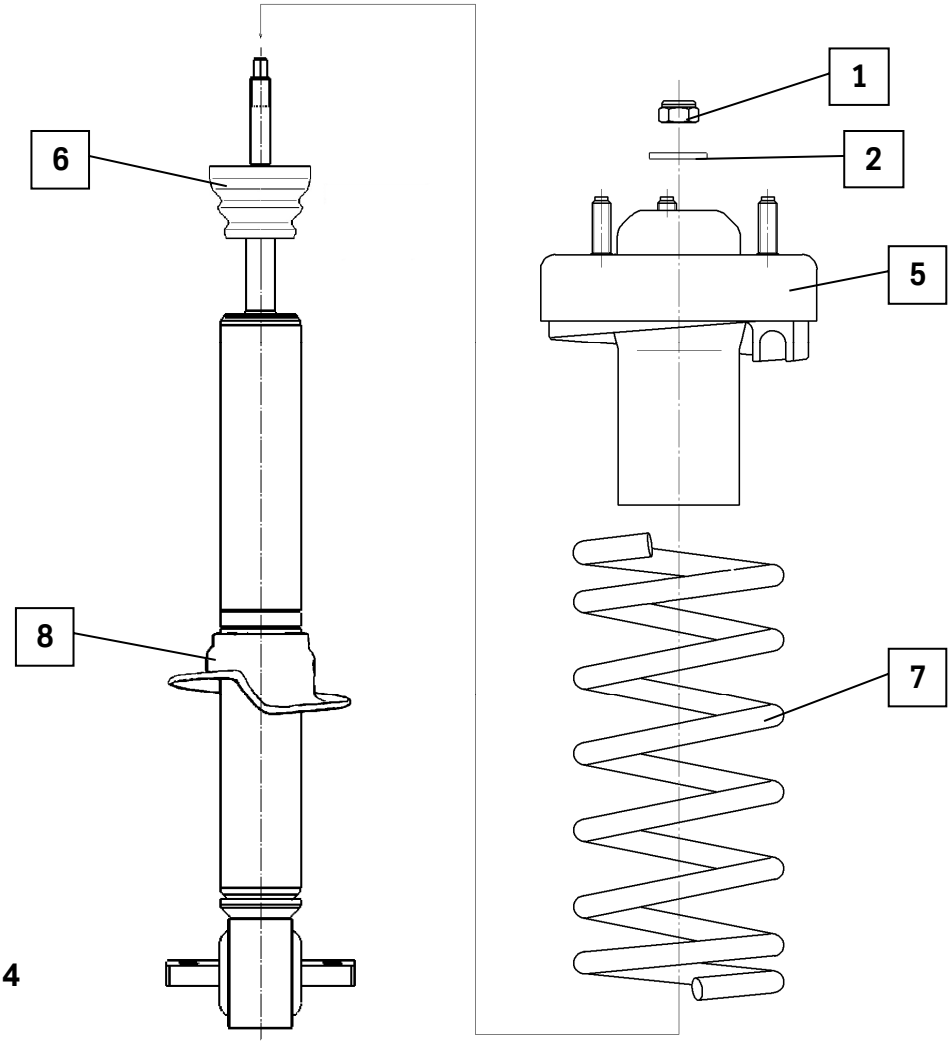

Figure 4

K. Install the assembly on to the vehicle and tighten all fasteners to the vehicle manufacturer's specifications- with exception to the lower T bar bolts. Install the supplied lower T bar bolts (4) down through the T bar and control arm. Then install the Bilstein supplied flange lock nuts (3) on to the supplied T-Bar bolts and tighten the supplied flange lock nuts to 90 N·m (66 lb·ft). Do not re-use the original lock nuts or T bar bolts. This completes the installation.

L. Check wheel alignment. If necessary, adjust to the vehicle manufacturer's specifications.