# E4-WM5-Y723A00
# MOUNTING INSTRUCTION

## IMPORTANT! READ THIS FIRST!

Installation of shock absorbers or other suspension components requires special tools and expert knowledge. Accordingly, installation of all BILSTEIN products must be performed by a professional automotive suspension technician.

When replacing other brands, BILSTEIN shock absorbers or other suspension components should always be installed as a set. All BILSTEIN products must only be used for the specific, intended application as indicated in the application guide. **Any use of any BILSTEIN product other than for its intended use may result in serious bodily injury or death.**

Always use a chassis hoist for the installation of BILSTEIN products and make certain that the raised vehicle is securely attached to the hoist and/or supported to prevent the vehicle from slipping, falling, or moving during the installation process.

**If you install any BILSTEIN product without the necessary special tools, expertise, and chassis hoist, you may subject yourself to the risk of serious bodily injury or death.**

BILSTEIN shock absorbers are gas-filled and are highly pressurized.

- Never place any BILSTEIN shock absorbers in a vise or use a clamp on any BILSTEIN shock absorber.
- Never apply heat near any BILSTEIN shock absorber.
- Never attempt to open or repair any BILSTEIN product, in order to prevent **serious bodily injury or death.**

Any attempt to misuse, misapply, modify, or tamper with any BILSTEIN suspension product voids any warranty and **may result in serious bodily injury or death.**

While installing any BILSTEIN product:

- Do not use impact tools for loosening or tightening fasteners, because this may destroy the screw threads.
- Self-locking fasteners must only be used **once**!
- Reuse original equipment components only if they are in good condition, otherwise replace them with new components.
- Never remove the slight film of oil on the shock absorber piston rod and seal.
- All mounting fasteners for shock absorbers and other suspension components must be securely tightened before tension is placed on the suspension system, unless otherwise specified in the manufacturer's service manual or in this instruction.

After installing any BILSTEIN product:

- The suspension caster and camber must be checked and/or adjusted to comply with the vehicle manufacturer's specifications.
- The (load dependent) brake compensator and the anti-lock brake system must be checked and/or reset to comply with the vehicle manufacturer's specifications.
- The headlight aim must be checked and adjusted. Or, if applicable, adaptive headlights must be checked and recalibrated to comply with the vehicle manufacturer's specifications.
- If applicable, any/all Advanced Driver Assistance Systems (ADAS) must be checked and recalibrated to comply with the vehicle manufacturer's specifications.

***CAUTION for COILOVER TYPE SUSPENSIONS!!!***
**If disassembling a coilover type suspension, refer to the vehicle manufacturer's service manual for proper procedures. The coil spring is preloaded and must be compressed with a spring compressor to release load before the upper mount is disassembled. Failure to follow the vehicle manufacturer's procedures may cause serious injury or death, and may damage the vehicle.**

***IMPORTANT!!!***
**This BILSTEIN product may or may not be compatible with non-BILSTEIN aftermarket products and/or vehicle modifications. It is the responsibility of the professional automotive suspension technician performing the installation to identify any non-OEM components and/or modifications on the vehicle that may interact with the suspension system. These must be evaluated for any potential physical static or dynamic interference with and/or effect on the function of this BILSTEIN product.**

# E4-WM5-Y723A00
# MOUNTING INSTRUCTION

**IMPORTANT:**
**PLACE CIRCLIP IN APPROPRIATE GROOVE TO ADJUST RIDE HEIGHT.**
Use appropriate tools to move the circlip. Ensure that the circlip is fully seated in the groove after moving it (you should be able to rotate it manually in the groove). Install the spring seat in the direction shown only. The circlip must fit completely in the groove inside the spring seat (DETAIL A). **Improper installation will cause permanent damage to the shock!**

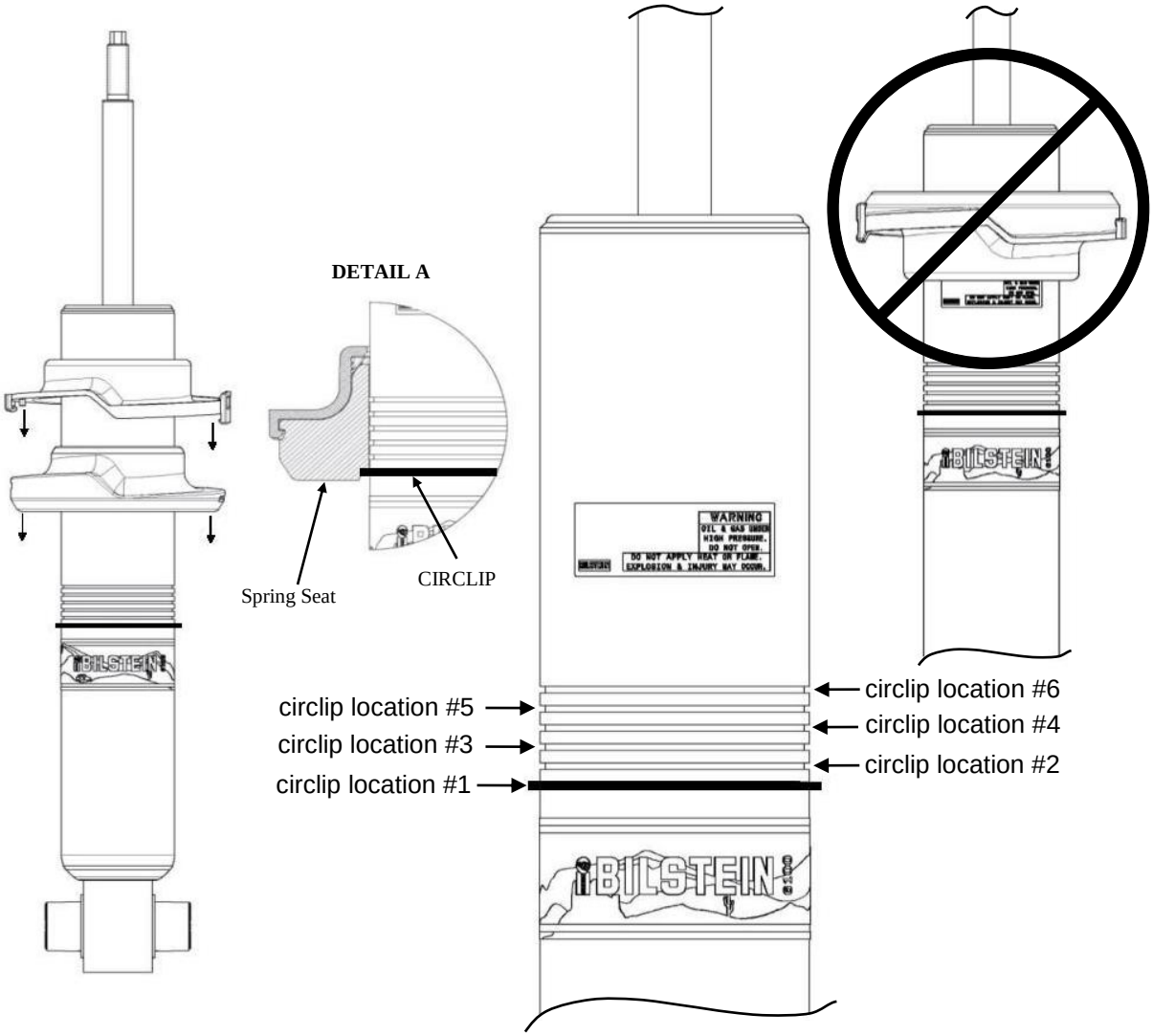

| B8 6100 Typical Lift Heights with OEM Springs** | | |
|---|---|---|
| **Circlip Location** | **With Sasquatch package** | **Badlands trim Level (Without Sasquatch package)** |
| #6 | 1.1” | 1.9” |
| #5 | 0.9” | 1.7” |
| #4 | 0.7” | 1.5” |
| #3 | 0.5” | 1.2” |
| #2 | 0.3” | 1.0” |
| #1 | Stock | 0.8” |

| B8 6112 Typical Lift Heights with Bilstein Springs** | | | | |
|---|---|---|---|---|
| **Circlip Location** | **With Sasquatch package** | **Badlands trim Level (Without Sasquatch package)** | **Without Sasquatch package/ Without Badlands trim** Vehicles NOT equipped with factory yellow Bilstein ESCV shocks. | |
| | | | 4 Door | 2 Door |
| #6 | 1.4” | 2.3” | 2.8” | Do not use |
| #5 | 1.2” | 2.1” | 2.6” | Do not use |
| #4 | 1.0” | 1.9” | 2.4” | 2.8” |
| #3 | 0.7” | 1.6” | 2.2” | 2.5” |
| #2 | 0.5” | 1.4” | 2.0” | 2.2” |
| #1 | 0.3” | 1.2” | 1.8” | 2.0” |

** Ride heights indicated are typical. Actual ride height is influenced by which factory suspension the vehicle is equipped with and its condition; optional equipment and accessories on your vehicle, and other vehicle modifications such as replacement coil springs, wheel and tire combinations, etc.
Modifying/lifting the suspension to your vehicle may raise its center of gravity and may make it more susceptible to loss of control and/or rollover, which may result in death or serious injury. We strongly recommend that you offset the loss of rollover resistance as much as possible by increasing tire track width, and that you equip the vehicle with a functional roll bar and cage system.
Wear seat belts and shoulder harnesses at all times, and avoid situations where a side rollover may occur.

**Instructions for disassembly of OE shock absorber module:**

**A.** Remove the existing shock and spring unit from the vehicle following all procedures in the vehicle manufacturer's service manual.

**B.** Note the lower bushing orientation relative to the studs and pin on the upper mount as shown in Figure 1 (important for reassembly).

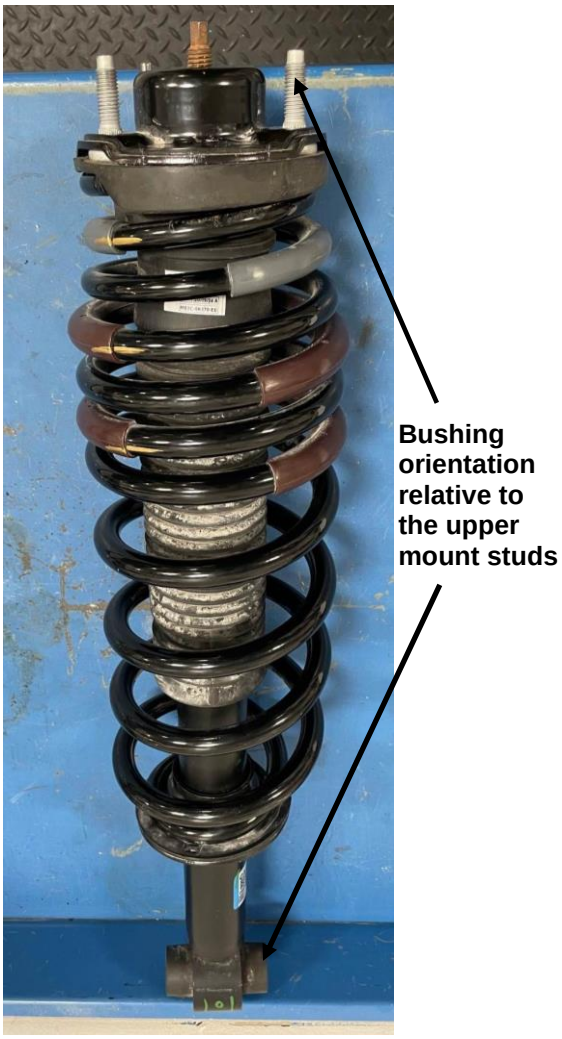


**Figure 1: OEM Bushing/spring**

**C.** Using an appropriate spring compressor, compress the spring until it can be rotated freely by hand. Then, disassemble the shock and spring unit.

**Instructions for assembly of Bilstein B8 6100/6112 Series shock absorber module:**

**D.** Install the supplied spring seat followed by the supplied spring seat isolator onto the new Bilstein shock body as shown. Orient the spring seat and spring seat isolator in the direction shown only. Ensure that the groove inside the spring seat fits over the circlip on the shock body [see page 2 (DETAIL A)]. Improper installation will cause permanent damage to the shock.

**E.** Discard the OEM dust boot as it is not compatible with the Bilstein B8 6100/6112 shock absorber.

**F.** Using an appropriate spring compressor, compress the appropriate spring and assemble it with the new Bilstein shock. **For 6100s, use the OEM coil spring. For 6112s, use the Bilstein supplied coil spring.** Ensure that the coil spring is installed in the direction shown only. Refer to Figure 1.

**G.** Install the OEM jounce bumper followed by the OEM top hat assembly (which includes the OEM top mount plate and OEM top mount spring isolator) over the threaded stem on the new Bilstein shock and on top of the spring. Refer to Figure 4.

**NOTE: DO NOT use the OEM rod collar on the new Bilstein 6100/6112 shock, refer to Figure 2.**

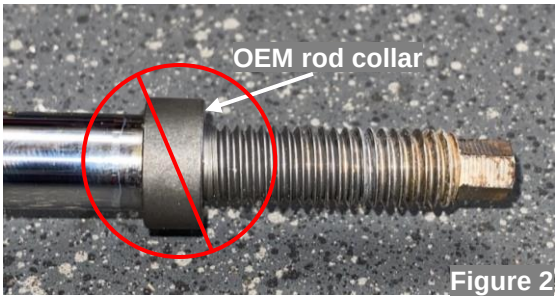


**H.** Rotate the coil spring until the end of the top coil is seated into the OEM top mount spring isolator as shown in Figure 3.

**I.** Rotate the shock so the lower bushing is aligned with the upper mount studs as noted in step B and shown in Figure 1.

**J.** Install the provided new flange lock nut and tighten to 45 Nm (34 lb/ft).

******DO NOT USE AN IMPACT WRENCH TO TIGHTEN THE LOCK NUT! ******

**K.** Release the spring compressor while ensuring that the end of the top coil remains seated in the OEM top hat assembly.

**L.** Install the assembly on to the vehicle and tighten all fasteners to the vehicle manufacturer's specifications. This completes the installation.

**M.** Check wheel alignment. If necessary, adjust to the vehicle manufacturer's specifications.

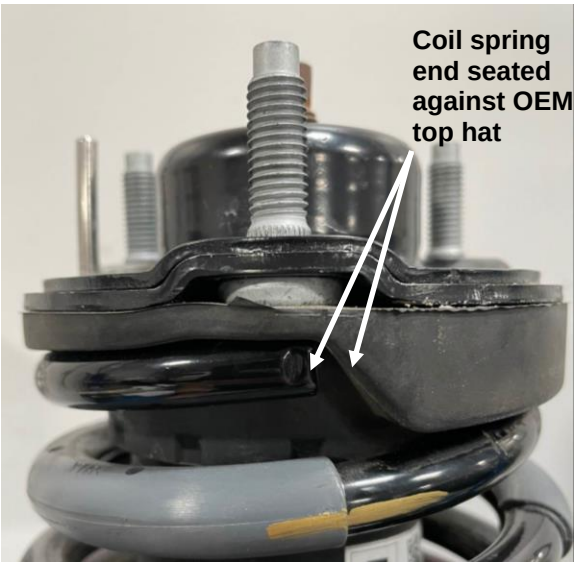


**Figure 3: Coil spring clocking**

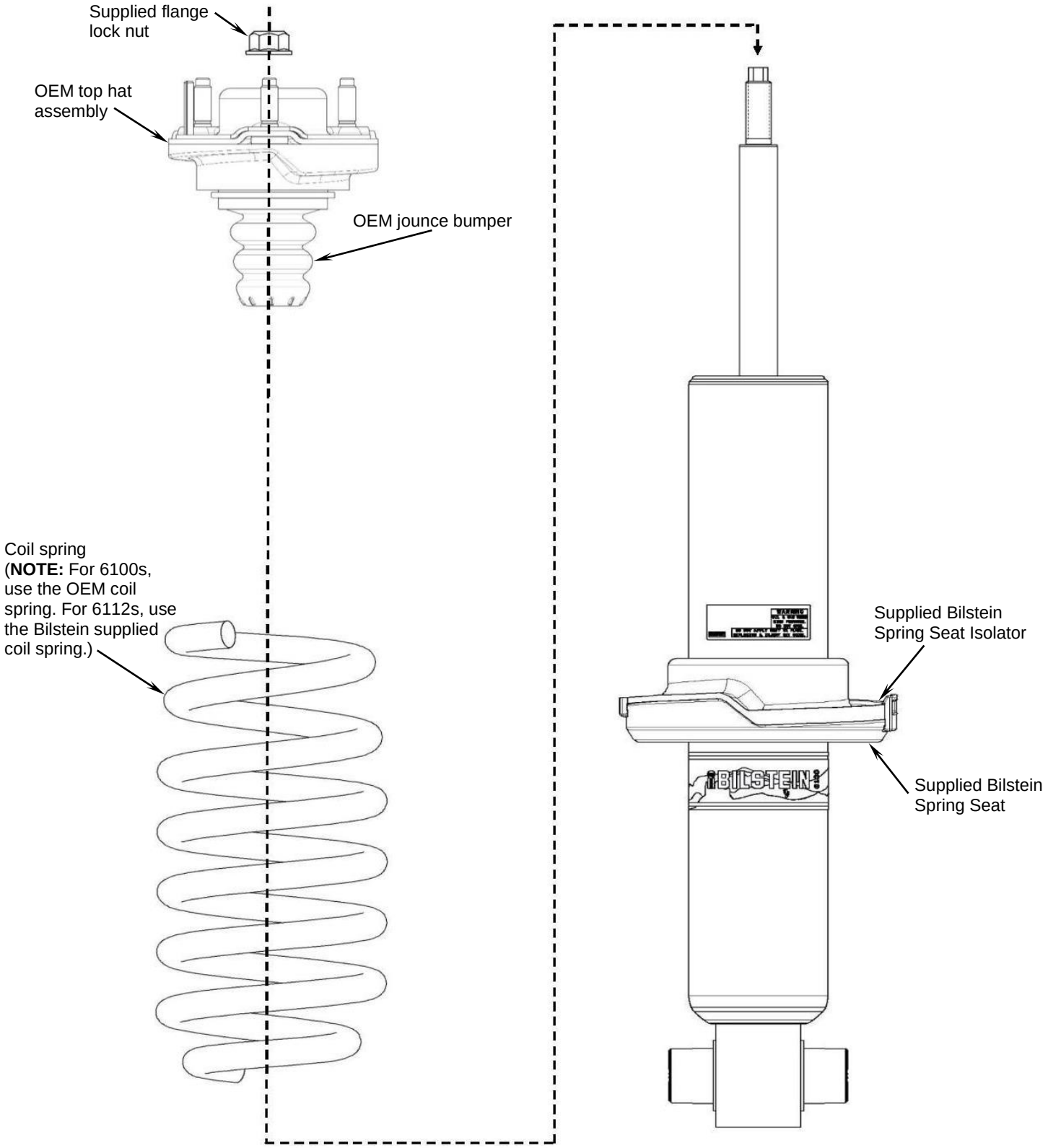
Supplied flange lock nut
OEM top hat assembly
OEM jounce bumper
Coil spring (**NOTE:** For 6100s, use the OEM coil spring. For 6112s, use the Bilstein supplied coil spring.)
Supplied Bilstein Spring Seat Isolator
Supplied Bilstein Spring Seat

Figure 4