# 2.0 P.S. IFP SHOCK
## EXPLODED VIEW DIAGRAM

FOX RACING SHOX

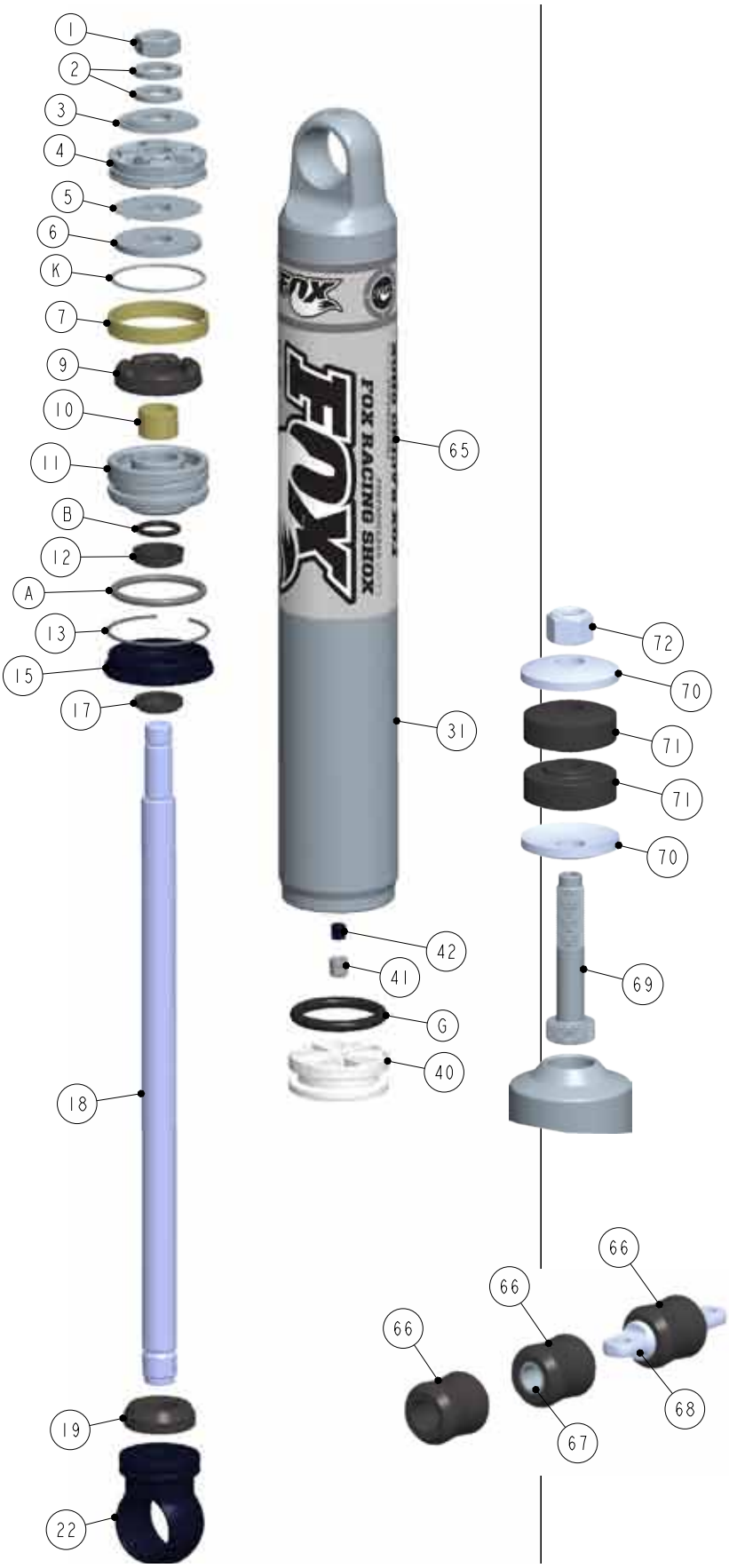


### PARTS

| # | DESCRIPTION | # | DESCRIPTION |
|---|---|---|---|
| 1 | Piston Lock Nut | 38 | Reservoir Decal |
| 2 | Back-Up Washer | 39 | IFP Wear Band |
| 3 | Rebound Valve Stack | 40 | IFP |
| 4 | Damping Piston | 41 | Air Valve Housing |
| 5 | Compression Valve Stack | 42 | Air Valve Core |
| 6 | Top-Out Washer | 43 | Air Valve Cap |
| 7 | Damping Piston Wear Band | 44 | Piggy Back Bridge |
| 8 | Shaft Spacer | 45 | Piggy Back Lock Ring |
| 9 | Top-Out Bumper | 46 | Piggy Back Bridge Bolt |
| 10 | Internal Bearing | 47 | Air Shock Spring |
| 11 | Bearing Housing | 48 | Spring Retainer Adapter |
| 12 | Bearing U-Cup Seal | 49 | Bump Stop Pad Nut |
| 13 | Retaining Ring | 50 | Bump Stop Pad Bolt |
| 14 | Spring Guide Retainer | 51 | Bump Stop Pad |
| 15 | Bearing Cap | 52 | Bypass Reservoir Tube |
| 16 | Bearing Set Screw | 53 | Bypass Reservoir Fitting |
| 17 | Bearing Cap Wiper Seal | 54 | Bypass Tube |
| 18 | Shaft | 55 | Bypass Piston |
| 19 | Bottom-Out Bumper | 56 | Bypass Spring |
| 20 | Spring Retainer | 57 | Bypass Plunger |
| 21 | Spring Retainer Clip | 58 | Bypass End Cap |
| 22 | Eyelet | 59 | Adjustment Screw |
| 23 | Eyelet Spacer/Reducer | 60 | Adjustment Screw Lock Nut |
| 24 | Eyelet Retaining Ring | 61 | Reducer Bushing |
| 25 | Spherical Bearing | 62 | Internal Body |
| 26 | Body Cap | 63 | Internal Bypass Valve Stack Nut |
| 27 | Preload Back-Up Ring | | |
| 28 | Preload Ring | 64 | Internal Bypass Valve Stack |
| 29 | Crossover Ring | 65 | Body Decal |
| 30 | Crossover Ring Set Screw | 66 | Eyelet Bushing |
| 31 | Body | 67 | Eyelet Sleeve |
| 32 | Spring Divider | 68 | Eyelet Bar Pin |
| 33 | Spring Guide | 69 | Stem |
| 34 | Reservoir Hose Adapter | 70 | Stem mount washer |
| 35 | Remote Reservoir Hose | 71 | Stem mount bushing |
| 36 | Reservoir End Cap | 72 | Stem mount nut |
| 37 | Reservoir | | |

### O-RINGS

| # | DESCRIPTION |
|---|---|
| A | Bearing Housing |
| B | Shaft Bearing |
| C | Spring Retainer |
| D | Body Cap |
| E | Air Valve Housing |
| F | Reservoir End Cap |
| G | IFP |
| H | Piggy Back Bridge |
| I | Piggy Back Bridge Port |
| J | Ø 1.25 Shaft Bottom-Out Bumper |
| K | Piston |